VEHICLE CHARACTERISTICS

NOMENCLATURE: LIGHT TACTICAL TRAILER DATE: May 2002
LTT-L M1101 NSN 2330-01-387-5443

DESIGNATIONS VEHICLE DATA **TYPE CLASSIFIED: STANDARD**

General

Maximum Vehicle Weight……..3400 lb (1542 kg)
Curb Weight…….1460 lb (662 kg)
Maximum Payload Capacity…. 1940 lb (880 kg)
Hull…… Unitized body construction using aircraft grade aluminum and chromoly steel

Dimensions

Overall Length…… 132 inches (335cm)
Overall Width…… 85.6 inches (217 cm)
Overall Height…….. 52.5 inches (133 cm)
Track Width…….. 72.5 inches (184 cm)
Drawbar Length …….. 93.2 inches (237 cm)
(from axle center to eye center)
Drawbar Eye Height…… 29.5 inches (75 cm)
Deck Height…….. 34.5 inches (88 cm)
Ground Clearance (Laden)….. 16 inches (41 cm)

Running Gear

Suspension Type…… Fully independent progressive rate trailing arm suspension
Axle…….Tubular steel
Spring Media…… Progressive rate torselastic rubber chords
Shock Absorbers…….Telescopic, direct acting, one per wheel, HMMWV compatible
Wheels…….. 16.5 X 8.25, two piece steel, HMMWV compatible, 8 on 6.5 inch bolt pattern
Tires…….. 37X12.50R16.5 Goodyear Wrangler M/T, with 30-mile runflat inserts, HMMWV compatible
Brakes……..12 inch x 2 inch free backing hydraulic surge brakes with automatic breakaway actuation. Independent lever-operated left and right side mechanical parking brakes.
Electrical System…….24 Volt DC sealed lighting system with blackout convoy lights, 12 pin connector plug mates with HMMWV

Performance

Max Speed (Primary Roads)…..55 mph (88 kph)
Max Speed (Secondary Roads).35 mph (56 kph)
Max Speed (Off Road)…….20 mph (32 kph)
Departure Angle…….. 39 degrees
Turning Angle……..80 degrees
Fording……..60 inches (152 cm)

SILVER EAGLE
MANUFACTURING COMPANY
5825 N.E. Skyport Way
Portland, OR 97218-1249
Phone: (800) 547-6792 Fax: (503) 335-2171

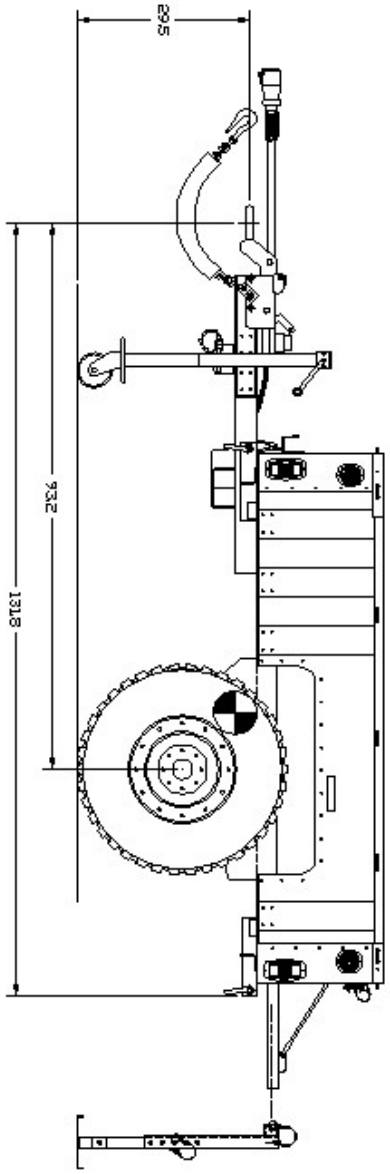
29.5
93.2
131.8

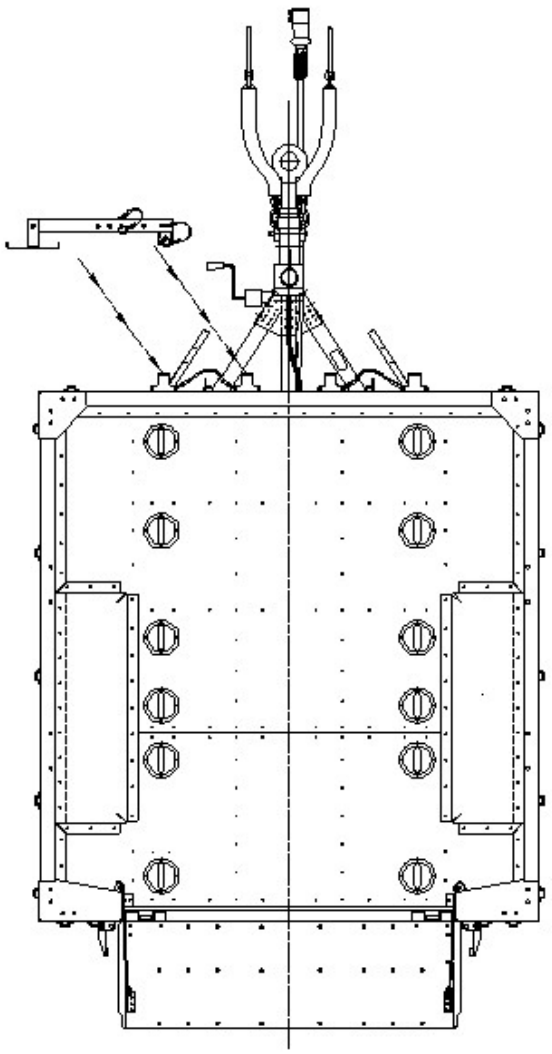

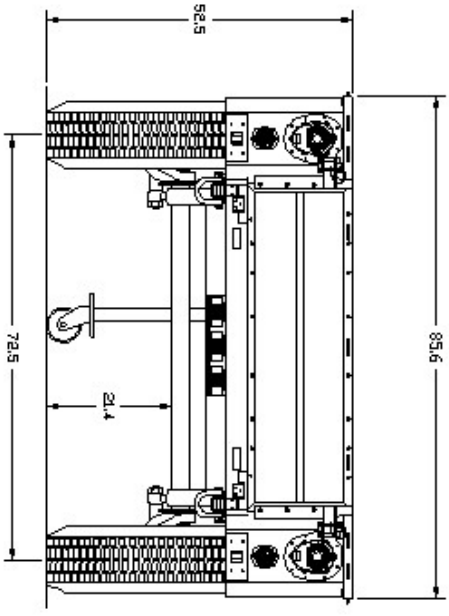
52.5
72.5
21.4
85.6